Tork® Mechanical Hand Towel Roll Dispenser

Distributeur mécanique Tork® de rouleaux de serviettes à mains

Dispensador mecánico de toallas de mano en rollo Tork®

H80 H71

www.torkusa.com

Tork® Mechanical Hand Towel Roll Dispenser

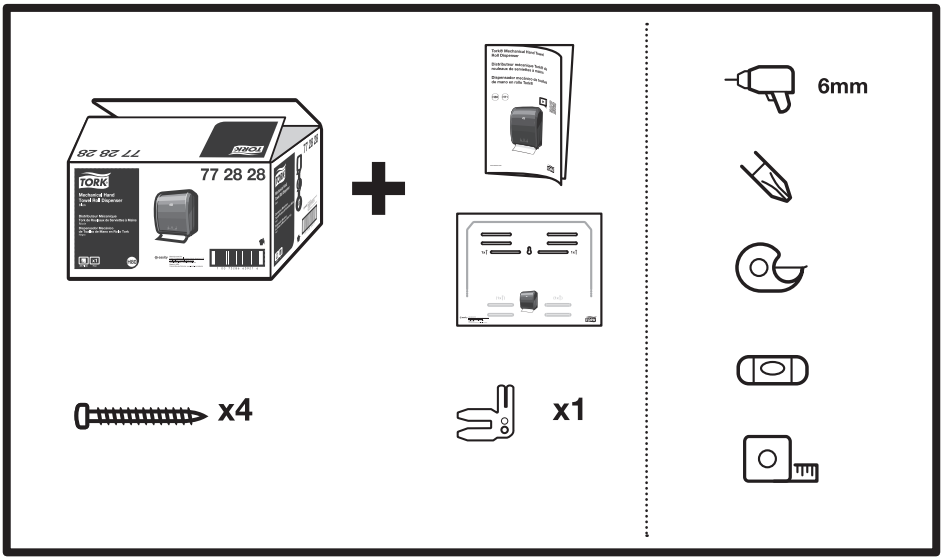

1

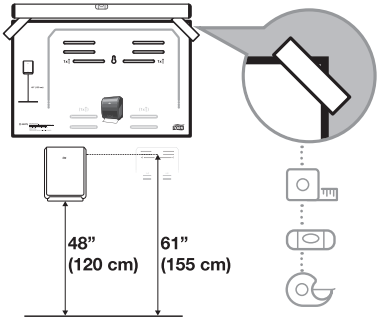

2

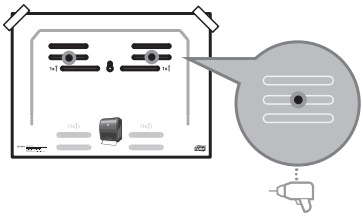

3

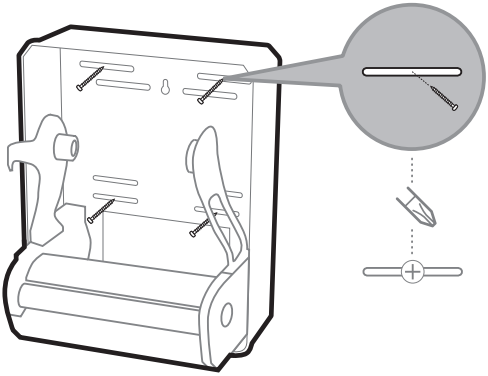

4

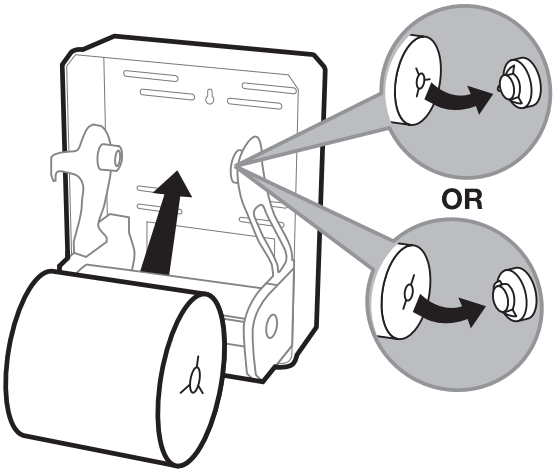

5

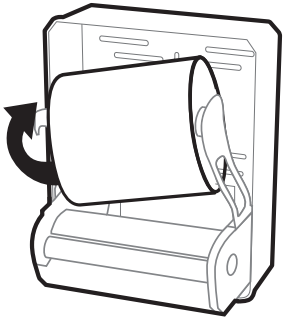

6

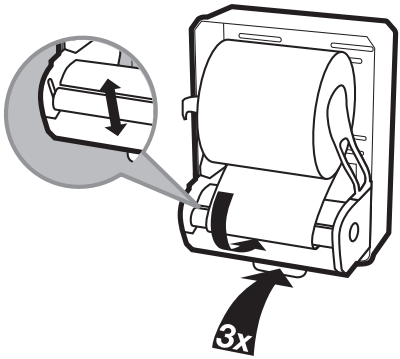

7

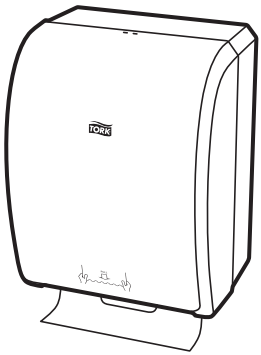

Manufactured for
Essity Professional Hygiene North America LLC
Philadelphia, Pennsylvania 19104
www.essity.com, www.torkusa.com
Made in USA
Patents/Brevets/Patentes: www.essity.com/patents